Advance Enclosures

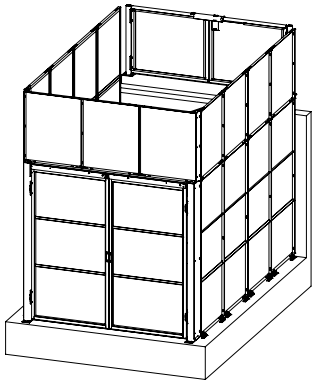

All enclosures are custom designs. The main components are universal, but each local authority may tweak the codes to suit their tastes, so it is our job to provide a wide array of options to make it easier to comply with local needs. Our engineers and service people listen carefully to installers to be sure we adopt all the labor saving ideas that we hear about to make installations as quick and trouble free as possible.

Features & Benefits

- Our designs comply with all applicable ASME & ANSI standards
- Panel inserts are flattened expanded metal for excellent visibility
- Panel perimeters are angle iron with external access to mounting slots (Advance supplies ¼" flanged nuts and flanged bolts for 5/16" slots)
- Two adjustable feet for each bottom panel for easy leveling
- Electro mechanical gate interlocks are NEMA 4 rated
- All metal components are fully primed & baked enamel finishes

Gate Options:

STANDARD BI-PARTING SWING GATE

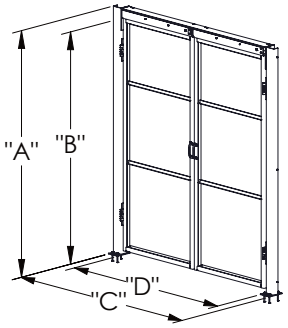

NOM. HEIGHT	A	B
90"	90	84.75
96"	96	90.75

PLATFORM SIZE	C	D
60	68	58
66	74	64
72	80	70
84	92	82
96	104	94
108	116	106

A - OVERALL HEIGHT
B - CLEAR OPENING, VERT.
C - OVERALL WIDTH
D - CLEAR OPENING, HORZ.

STANDARD UPPER LEVEL BI-PARTING SWING GATE

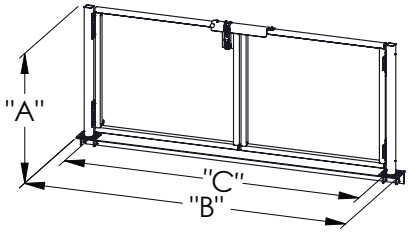

NOM. HEIGHT	A
42"	42.19

PLATFORM SIZE	B	C
60	69	58.25
66	75	64.25
72	81	70.25
78	87	76.25
84	93	82.25
96	105	94.25
108	117	106.25

A - OVERALL HEIGHT
B - OVERALL WIDTH
C - CLEAR OPENING, HORZ.

Advance Lifts offers the following advantages:

made in USA

ISO 9001:2015 Certified

Phone: 800-843-3625 • Fax: 630-584-9405 • www.advancelifts.com

©2016 Advance Lifts, Inc. All rights reserved.

OPTIONAL SINGLE PANEL VERTICAL SLIDING GATE

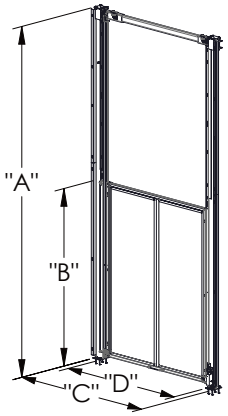

NOM. HEIGHT	A	B
84"	172	84
96"	210	96

PLATFORM SIZE	C	D
60	68	54.75
66	74	60.75
72	80	66.75
84	92	78.75
96	104	90.75
108	116	102.75

A - OVERALL HEIGHT
B - CLEAR OPENING, VERT.
C - OVERALL WIDTH
D - CLEAR OPENING, HORZ.

OPTIONAL DOUBLE PANEL VERTICAL SLIDING GATE

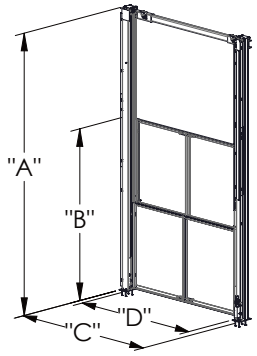

NOM. HEIGHT	A	B
84"	138	84
96"	150	96

PLATFORM SIZE	C	D
60	68	56.75
66	74	62.75
72	80	68.75
84	92	80.75
96	104	92.75

A - OVERALL HEIGHT
B - CLEAR OPENING, VERT.
C - OVERALL WIDTH
D - CLEAR OPENING, HORZ.

OPTIONAL HORIZONTAL SLIDING GATE

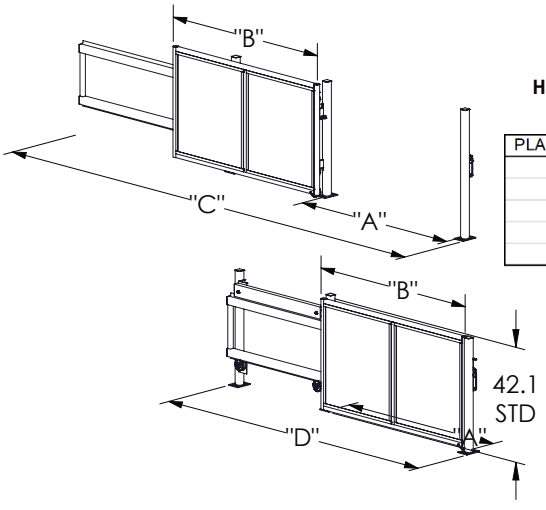

OPTIONAL

HORIZONTAL SLIDING GATE, MEZZANINE

PLATFORM SIZE	A	B	C	D
60	60	60	182.75	110.5
72	72	72	194.75	122.5
84	84	84	206.75	134.5
96	96	96	218.75	146.5
108	108	108	230.75	158.5

A - CLEAR OPENING, OPEN GATE
B - GATE WIDTH
C - OVERALL WIDTH, OPEN GATE
D - OVERALL WIDTH, CLOSED GATE

Custom designs are available

Advance Lifts offers the following advantages:

made in USA

ISO 9001:2015 Certified

©2016 Advance Lifts, Inc. All rights reserved.