ADVANCE LIFTS®

Pit Diagrams For Recessed Dock Lifts

Where Bridge Width is the Same as Platform Width

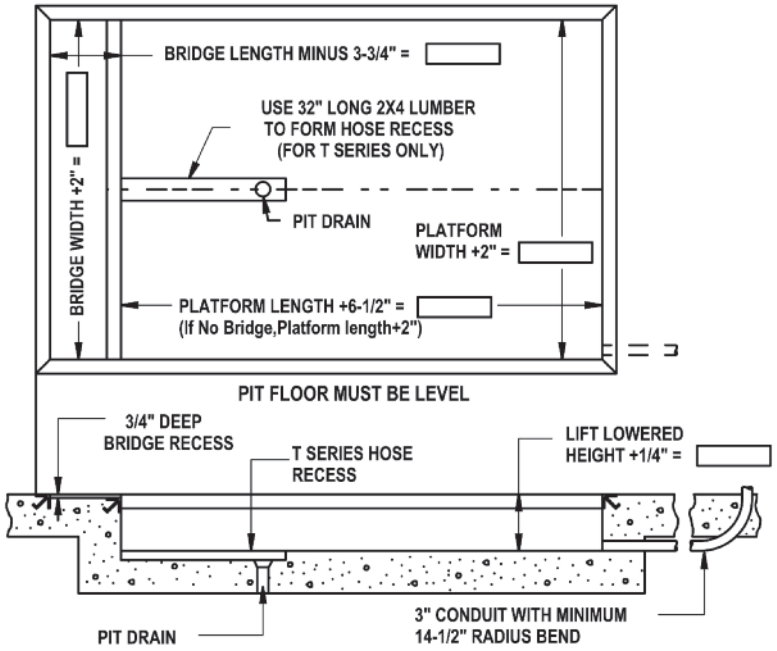

Where Bridge Width is Smaller Than the Platform Width

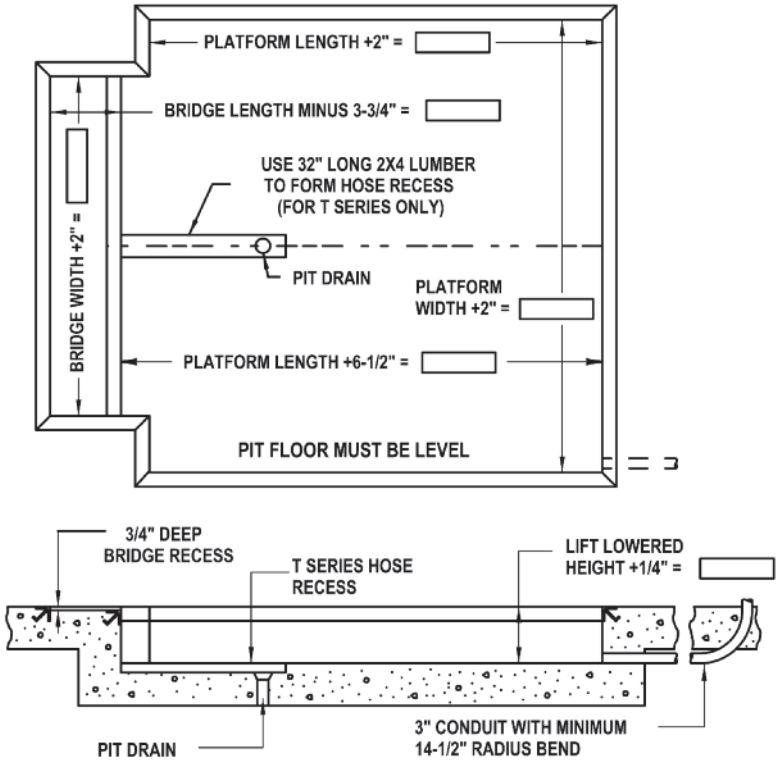

Notes

A Consult factory for pit diagram for optional wheel chock.

B Reinforce concrete to suit local soil conditions.

C All pit work and materials shown are the responsibility of owner or his agent (by pit contractor).

D Installer to run 1/2" diameter hose(s) and plastic tubing through 3" conduit from power unit to lift base.

E Dimension tolerances are plus 1/4" minus 0" (+1/4"-0").

F 180º steel hinge bridges require a bridge recess length equal to bridge length minus 2-3/4".

G 180º aluminum hinge bridges require a bridge recess length equal to bridge length minus 3-3/4" and a pit length equal to platform length plus 7-1/2".

H Consult factory for bridges longer than 30". (18" on 4000 Series).

Installation Bill of Materials

1 3" x 3" x 1/4" curb angle as required.

2 One (1) 3" conduit from power unit location to pit.

3 One (1) Advance Model _____.

4 One (1) electric disconnect switch for 5HP or 7-1/2HP motor.

5 (_____) gallons of ISO46 hydraulic fluid.

6 One (1) 1/2" SAE 100R2 hydraulic pressure hose from power unit location to lift base – 1/2" female #8JIC threads both ends +1/4" O.D. plastic tubing (two hoses required for 4000 Series Safetydok).

7 Concrete anchor bolts and material for shimming and/or grouting.

*Seller furnishes Advance dock lift only unless otherwise agreed to in writing.

Phone: 800-843-3625 • Fax: 630-584-9405 • www.advancelifts.com

©2013 Advance Lifts, Inc. All rights reserved.

ADVANCE LIFTS®

Pit Diagrams For Recessed Dock Lifts

Top of Dock Recessed Installation 3 Sided Pit

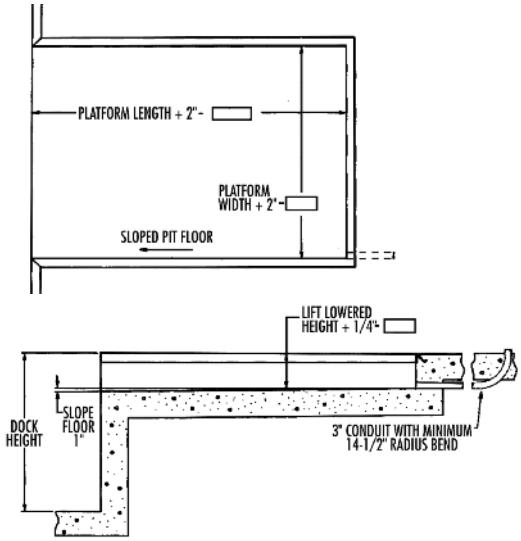

Top of Dock Installation Bill of Materials

1 3" x 3" x 1/4" curb angle as required.

2 One (1) 3" conduit from power unit location to pit.

3 One (1) Advance Model _____.

4 One (1) electric disconnect switch for 5HP or 7-1/2 HP motor.

5 (_____) gallons of ISO46 hydraulic fluid.

6 One (1) 1/2" SAE 100R2 hydraulic pressure hose from power unit location to lift base 1/2" female #8JIC threads both ends (two hoses required for 4000 Series).

7 Concrete anchor bolts and material for shimming and/or grouting.

**Seller furnishes lift only unless otherwise agreed to in writing.*

Typical Recessed Dock Lift Installation at a Raised Dock

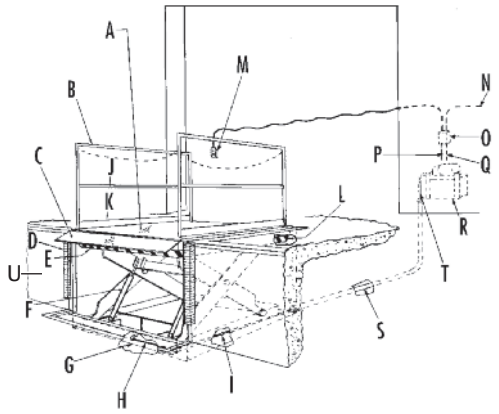

A Platform with Safety Tread Deck

B Removable Handrails with Safety Chains

C Hinged Bridge

D Rubber Dock Bumpers

E Black and Yellow Safety Striping

F Chrome Plated Rams

G Pre-Drilled Base Frame for Lagging Lift to Floor

H 48" long Hydraulic Connecting Hose supplied by Advance Lifts, Inc. with 1/2" Connector at center of base frame. Optional: 1/2" x 20' long Hydraulic Hose supplied by Advance Lifts, Inc.

I Connector

J Midrail

K Kickplate

L Bevel Toe Guards 4-Sides

M Up-Down Pushbutton Station NEMA 1, 3, 3R, 4, 4X W/20' Control Cord

N Incoming Power Source

O Motor Controller in NEMA 12 Enclosure

P To Motor on Power Unit

Q To Down Solenoid on Power Unit

R Power Unit 5 HP 230V 60Hz 3Ph motor mounted on Reservoir 26" W x 22" L x 21" H (including motor) with brackets for wall mtg.

Typical Recessed Dock Lift Installation At Ground Level

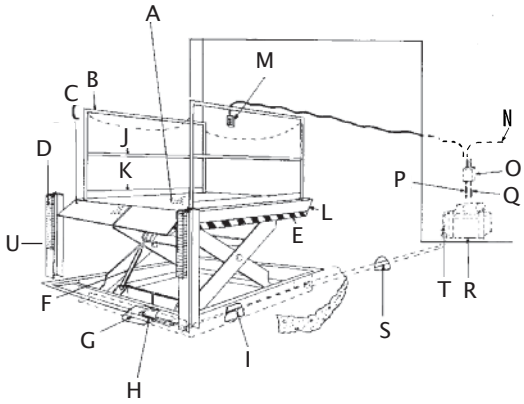

S Run 3" Conduit from Power Unit Location to Lift Base (by others)

T Installer to run 1/2" Hydraulic 100R2 Hose through and Plastic Return Line 3" Conduit from Power Unit to Connecting Hose and Tube

U WF Beam or Dock face

Phone: 800-843-3625 • Fax: 630-584-9405 • www.advancelifts.com

©2013 Advance Lifts, Inc. All rights reserved.