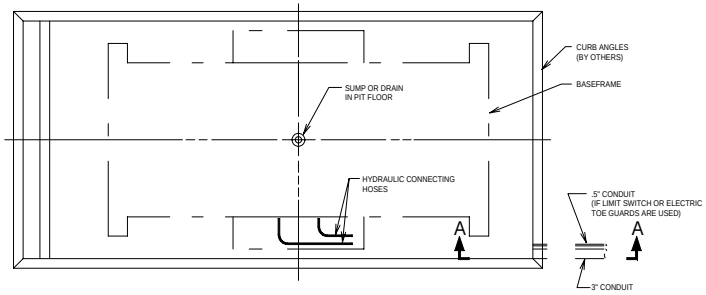

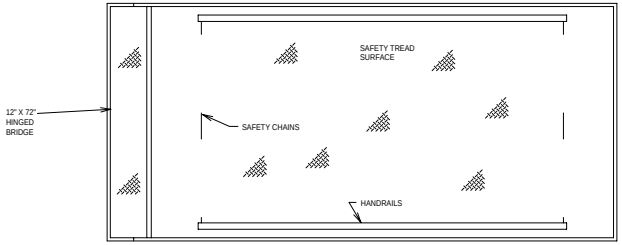

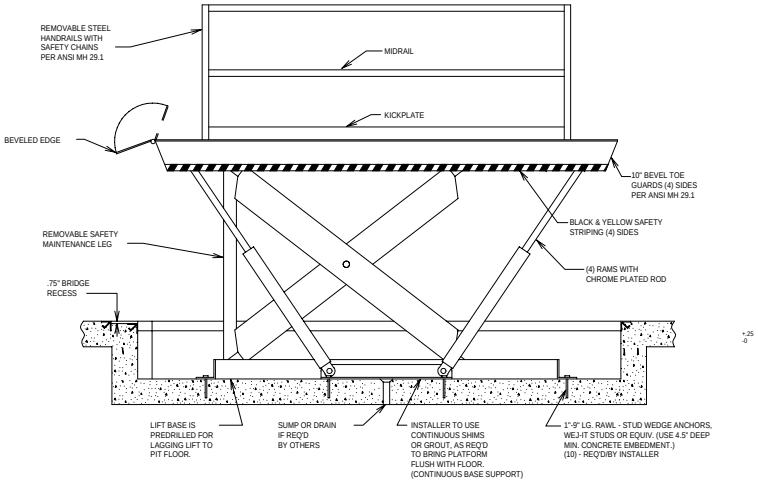

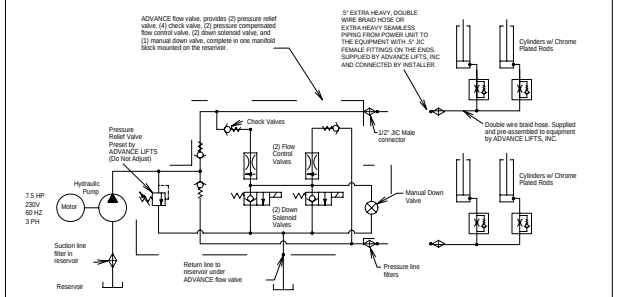

HYDRAULIC DIAGRAM

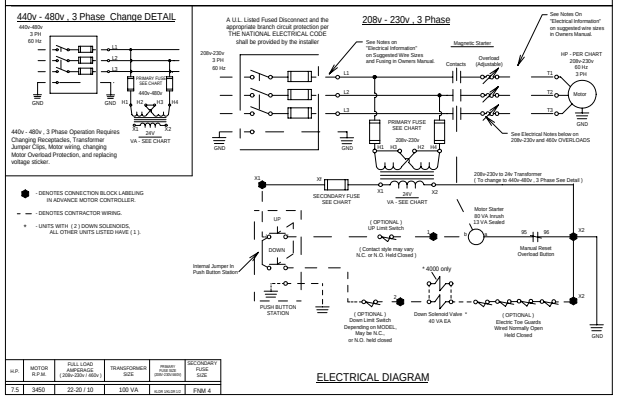

H.P.	MOTOR R.P.M.	FULL LOAD AMPERAGE (208v-230v / 460v)	TRANSFORMER SIZE	PRIMARY FUSE SIZE (208v-230v/460v)	SECONDARY FUSE SIZE
7.5	3450	22-20 / 10	100 VA	KLDR 25A,20A,15	FNM 4

ELECTRICAL DIAGRAM

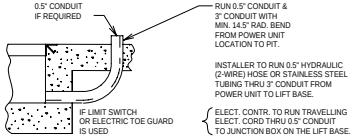

SECTION A - A

GENERAL NOTES:

1. ALL AXLES AND SHAFTS ARE CHROME PLATED.

2. ALL ROLLERS AND PIVOT POINTS ARE EQUIPPED WITH TEFLON SELF-LUBRICATING BEARINGS.

3. POWER UNIT EQUIPPED WITH ONE PIECE "ADVANCE FLOW" VALVE MANIFOLD.

4. INSTALLER TO FURNISH APPROX. 15 GALLONS OF A MULTI VISCOSITY ISO- 46 GROUP II BASE OIL & (1) 20' LG .5" EXTRA HEAVY, DOUBLE WIRE BRAID HOSE (SAE 100R2A) OR EXTRA HEAVY SEAMLESS PIPING FROM THE POWER UNIT TO THE EQUIPMENT WITH .5" JIC FEMALE FITTING ON THE ENDS.

5. REINFORCE CONCRETE TO SUIT LOCAL SOIL CONDITIONS PLUS YOUR DESIRED SAFETY FACTORS.

6. OVERALL POWER UNIT SIZE:
26" WIDE X 22" LONG X 21" HIGH (INCLUDING MOTOR, AND BRACKETS FOR WALL MOUNTING).

7. CONCRETE WORK, REINFORCING, BUILDING MODIFICATIONS, PIPING, RESERVOIR FLUID, ELECTRICAL WIRING, IMBEDDED ITEMS, INSTALLATION, ETC. (BY OTHERS)

8. ADVANCE LIFTS, INC. TO SUPPLY:
- (1) 20' LG. PUSHBUTTON CORD
- 40' LENGTH OF .25 O.D. CLEAR POLYURETHANE TUBING FOR THE VENT LINES.

9. FINISH: BLUE PAINT

9. PIT DIMENSION TOLERANCES ARE PLUS .25", MINUS 0" (+.25",-0")

SPECIFICATIONS:

CAPACITY : 18,000 LBS MAX. LIFTING CAPACITY
14,400 LBS MAX. AXLE CAPACITY ENDS
12,600 LBS MAX. AXLE CAPACITY SIDES

PLATFORM : 72" X 144",
SAFETY TREAD DECK,
REMOVABLE HANDRAILS - STEEL
12" X 72" STEEL BRIDGE WITH CHAIN
BEVEL TOE GUARDS
SAFETY STRIPIING

SPEED : 8 FPM

TRAVEL : 58" (FROM A 18" LOWERED HEIGHT)

LOWERED HEIGHT : 18"

POWER UNIT : 7.5 HP MOTOR 230 V 60 Hz 3PH
(REMOTE FROM LIFT)

CONTROL: UP-DOWN WEATHER-PROOF PUSHBUTTON STATION, PENDANT TYPE NEMA 1, 3, 3R, 4, 4X.

IN NEMA 12 ENCLOSURE : MAGNETIC STARTER,W/ OVERLOAD
230 V TO 24 V CONTROL TRANSFORMER,

APPROXIMATE SHIPPING WEIGHT: #6,800

DO NOT SCALE DRAWING

ADVANCE LIFTS
Advance Lifts, Inc. 701 S. Kirk Rd.
St. Charles, IL 60174
Phone: 630-584-9881 Fax: 630-584-9405

JOB NAME: X				
JOB NUMBER: X				
SCALE: X	REVISIONS		BY	DATE
DATE: X				
DRN: X / CKD:				
APVD:				
TITLE: SUPERDOK MODEL 4320		NO: D-		REV: